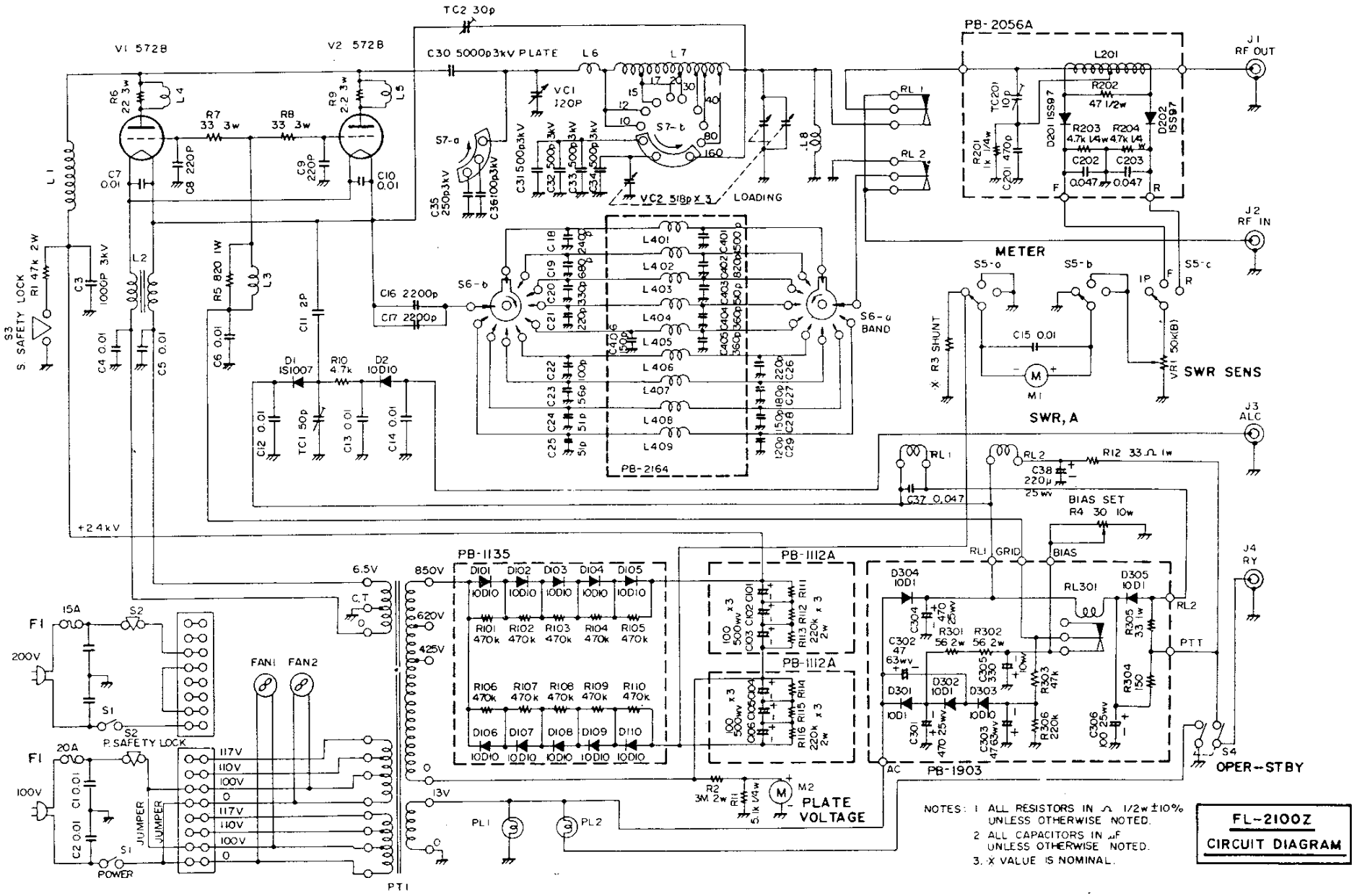

NOTES: 1 ALL RESISTORS IN Ω 1/2w ±10% UNLESS OTHERWISE NOTED.
2 ALL CAPACITORS IN μF UNLESS OTHERWISE NOTED.
3. X VALUE IS NOMINAL.

FL-2100Z
CIRCUIT DIAGRAM